REVISIONS				
LTR	DESCRIPTION	BY	APR	DATE
A	ADDED DOOR SWING	–	–	–
–	–	–	–	–

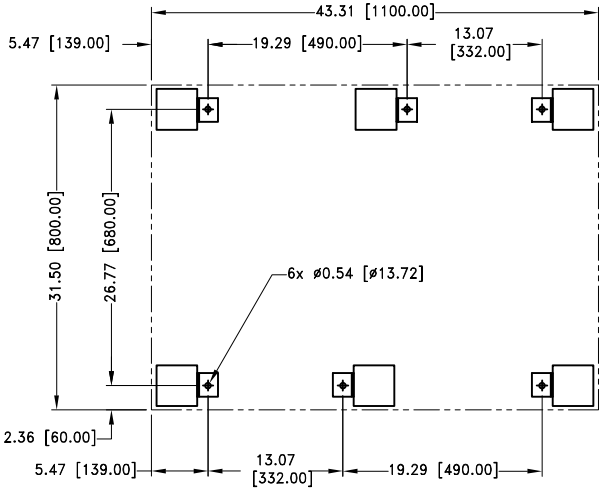

FOOT AND TIE DOWN BRACKET HOLE PATTERN

TOP VIEW

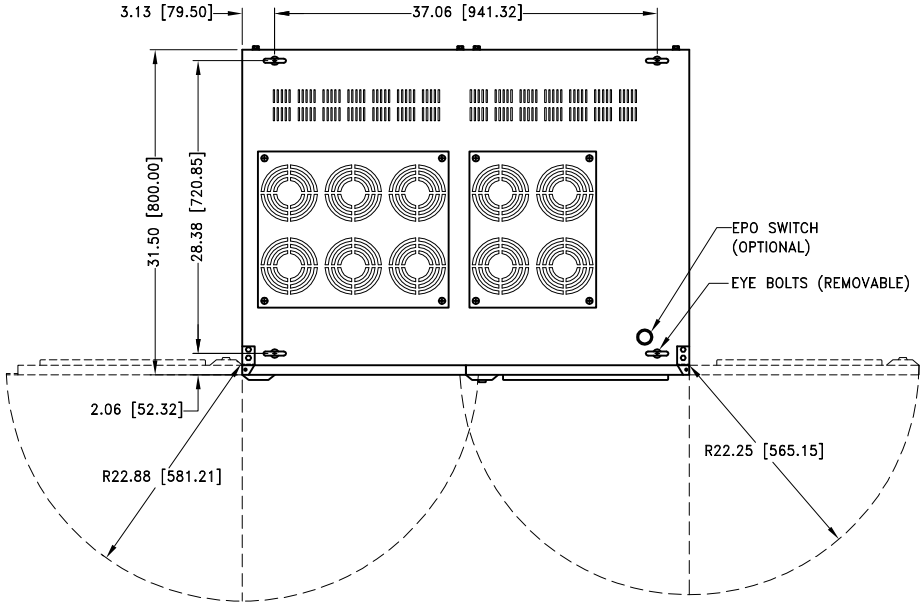

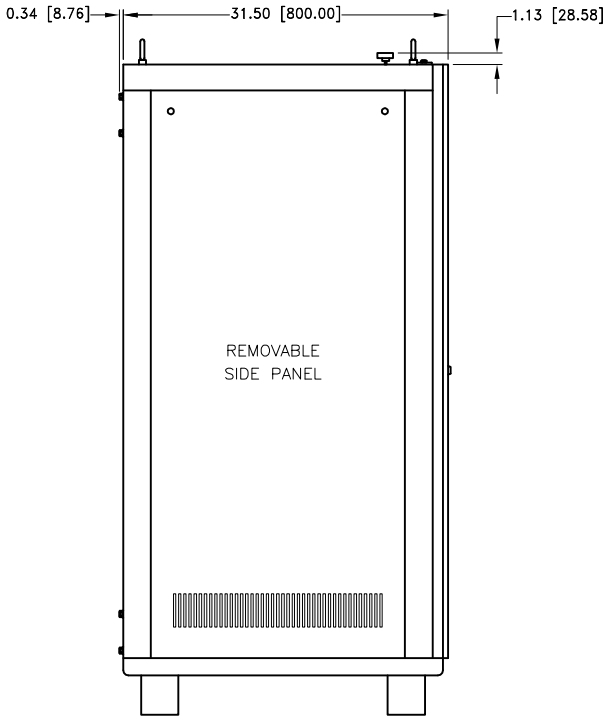

LEFT SIDE VIEW

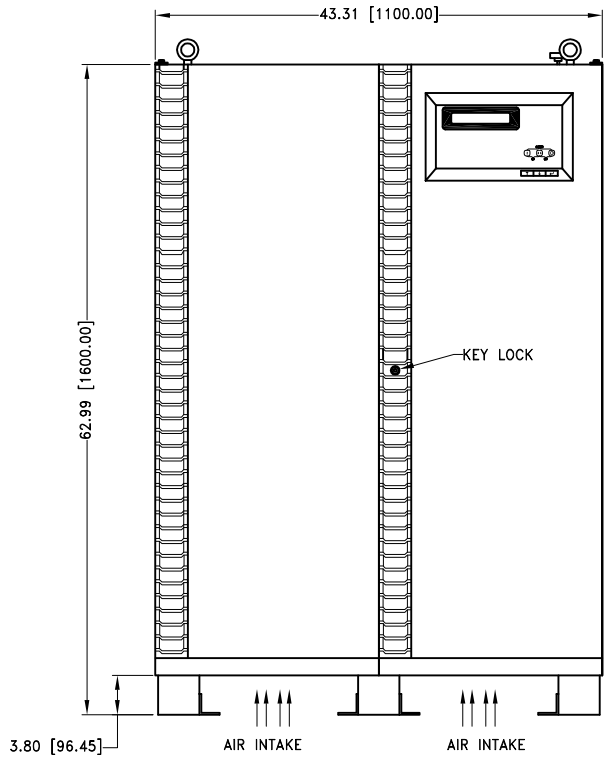

FRONT VIEW

NOTE:
1. ALL DIMENSIONS ARE IN INCHES (MILLIMETERS).
2. AIR INTAKE AND IN/OUT CABLES FROM THE BOTTOM.
3. COATING POWDER: 0.3MM THICK.
   COLOR: PANTONE COOL GREY #5.
4. FRONT AND REAR MARKING FOR REFERENCE ONLY.

THIS DRAWING IN DESIGN AND DETAIL IS NOVA ELECTRIC PROPERTY AND MUST NOT BE USED EXCEPT IN CONNECTION WITH OUR WORK. ALL RIGHTS OF DESIGN OR INVENTION ARE RESERVED.

TOLERANCES UNLESS OTHERWISE SPECIFIED
.XX = ± .02
.XXX = ± .005
ANGLE = ± 1/2°
DIMENSIONS IN INCHES UNLESS OTHERWISE NOTED
WWW.NOVAELECTRIC.COM
DO NOT SCALE

THIRD ANGLE PROJECTION

	DATE
DRAWN RL	01/22/09
CHECKED BT	01/22/09
APPROVED AL	01/22/09

NOVA ELECTRIC
A DIV. OF TECHNOLOGY DYNAMICS INC.
100 SCHOOL STREET
BERGENFIELD, N.J. 07621-2915

JUPITER, 43.5"W CABINET

SIZE			REV.
C	9981004		A
	CAGE: 29019	SHEET: 1 of 1	