REVISIONS				
LTR	DESCRIPTION	BY	APR	DATE
A	REMOVED REMOTE SWITCH & ADDED PLASTIC COVER	RL	BT	4/22/09
B	RESTORED SWITCH W/O REMOTE	RL	BT	4/22/09

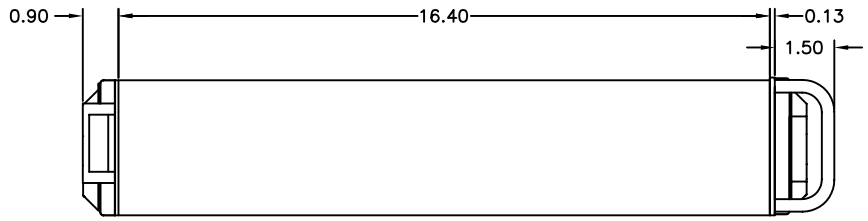

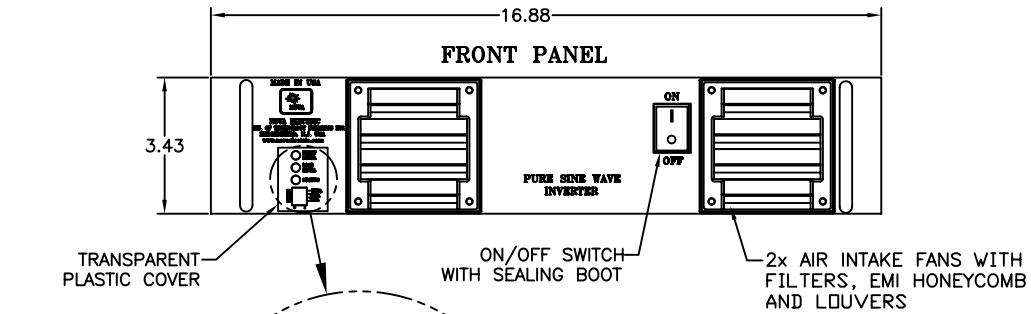

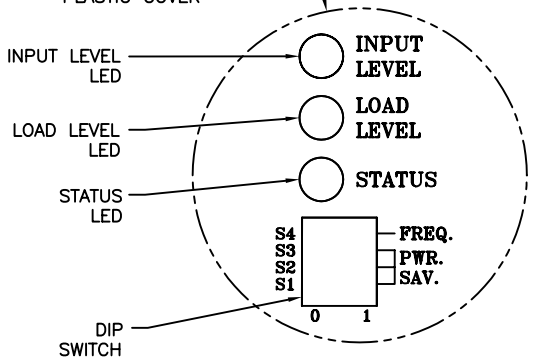

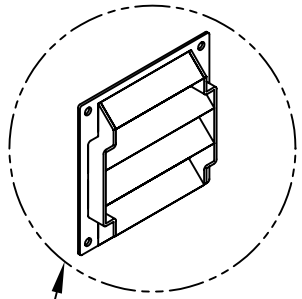

ISOMETRIC VIEW
(LOUVER)

TOP VIEW

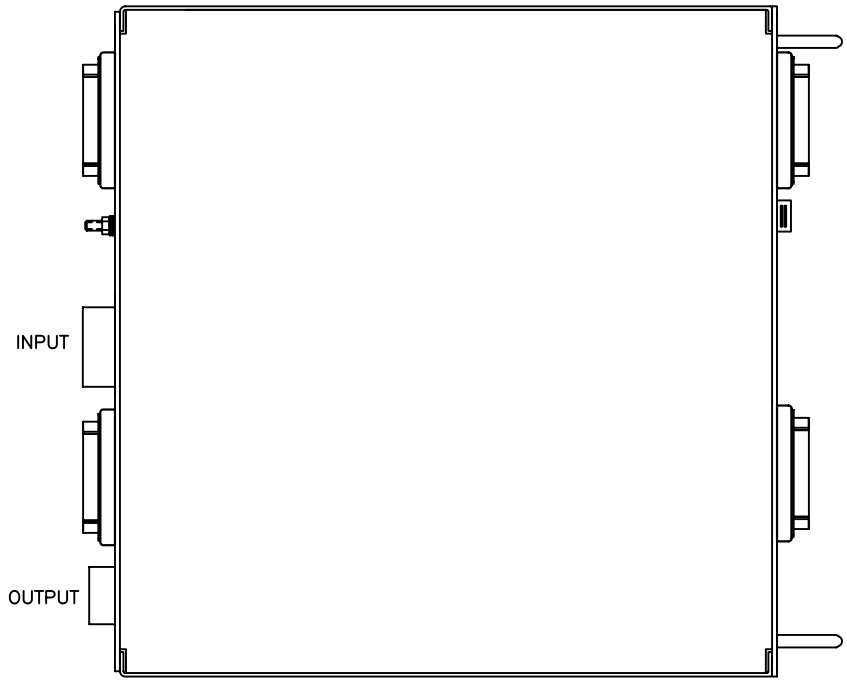

REAR PANEL

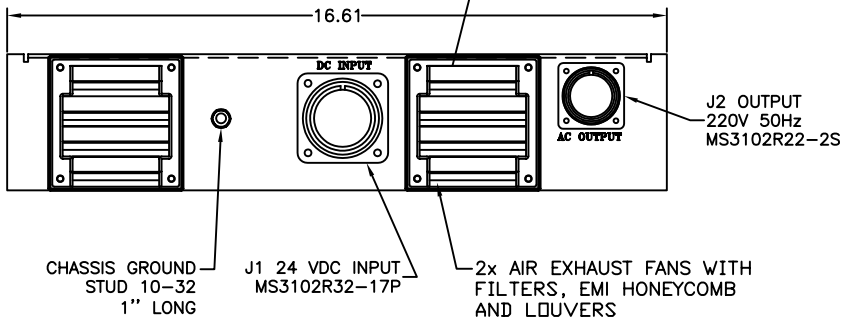

NOTES:

1. FRONT PANEL COLOR ANSI #61 GRAY SEMI-GLOSS. ALL OTHER SURFACES ARE YELLOW IRRIDITED.
2. WEIGHT: 29 POUNDS

INPUT

J1 MS3102R32-17P	
PIN	FUNCTION
PIN A	DC +
PIN B	
PIN C	DC −
PIN D	

OUTPUT

J2 MS3102R22-2S	
PIN	FUNCTION
PIN A	LINE
PIN B	NEUTRAL
PIN C	GND

UNLESS OTHERWISE SPECIFIED:
DIMENSIONS ARE IN INCHES
TOLERANCES:
FRACTIONS – DECIMALS .XX=± .02 .XXX=± .005 ANGLES ±.50°

MATERIAL: –

FINISH: –

THIS DRAWING CONTAINS PROPRIETARY INFORMATION AND MAY NOT BE REPRODUCED WITHOUT THE PERMISSION OF NOVA ELECTRIC.

DRAWN RL DATE 04/21/09
CHECKED B.T. DATE 04/21/09
APPROVED A.L. DATE 04/21/09

NOVA ELECTRIC
A DIV. OF TECHNOLOGY DYNAMICS INC.
100 SCHOOL STREET
BERGENFIELD, N.J. 07621-2915

TITLE: OUTLINE DRAWING RCGL WEATHERPROOF

SIZE C | 9810174 | REV. B

HTTP://WWW.NOVAELECTRIC.COM | SCALE 1 | CAGE: 29019 | SHEET 1 OF 1