RUGGED
GALAXY™ SERIES
TRUE ON-LINE UPS
3 - 5 - 6KVA

APPLICATIONS

Utilizing field proven transformer isolated topology, this family of rugged UPS is suitable for harsh environments and can be customized for unique applications including:

- Shelters
- Tactical Systems
- Shipboard Power
- MIL-STD-810
- MIL-STD-901
- HMMWVs
- Mobile Systems
- Ground support
- MIL-STD-461
- MIL-STD-1399

NOVA ELECTRIC
www.novaelectric.com
novasales@theallpower.com

UL REGISTERED FIRM ISO 9002 FILE: A5269

A Leader in UPS Technology since 1966 - 500VA to 300KVA

MADE IN USA

TRUE ONLINE RUGGED SINEWAVE UPS

CAN MEET MIL-STD-810, MIL-STD-1399, MIL-STD-901, MIL-STD-704, & MIL-STD-461 OPTIONALLY

APPLICATIONS

The rugged Galaxy Series UPS is designed to provide years of reliable service in harsh shock, vibration, humidity, and EMI environments. Military applications include HMMVW, UAV, Shipboard, Submarine, Shelter, and Mobile Power Units.

OPTIONS

- Emergency Power Off Circuit
- MS Connector Mates
- Chassis Slides
- Internal Solid State Transfer Switch
- Premium 10 Year Life Wide Temperature Range Batteries
- True RS-232 Interface Port
- Run Time to 24+ Hours
- Three-Phase Input
- Custom Cabinets & Turnkey Solutions

SPECIFICATIONS

ELECTRICAL

Frequency: Specify 50, 60, or 400Hz
Voltage Regulation: ± 1% NL to FL
Frequency Regulation: ± 0.5% NL to FL
Harmonic Distortion: 5% THD
Power Factor: 0.7 lead to 0.7 lag
Efficiency at full load: 75-80% typical
Overload: 125% for 5 minutes

EXTERNAL BATTERIES

7" High x 19" Wide x 21" Deep Rack Mount battery drawers containing sealed, maintenance-free, user replaceable batteries rated for 3-5 years lifetime. Battery cabinets and racks also available with run time from 5 minutes to 24+ hours.

ENVIRONMENTAL

Operating Temp.: -20° to +50°C
Storage Temp. Range: -40° to +60°C
Humidity: to 95% non-condensing
Elevation: 15,000 Ft. (4.572m) operating; 40,000 ft. (12.192m) non-operating
Shock: 30g for 20mS
Audible Noise: Less than 55 dbA at 5 ft.

DIAGNOSTICS

Alarm Contacts: Standard
RS 232: Optional

PROTECTIVE FEATURES

AC & DC Input Circuit Breakers, Low Battery Shut Off, Overload & Thermal Protected, Input Under/Overvoltage Protected, Audible Alarm with Silence Switch.

MODEL SELECTION

MODEL	KVA	INPUT	INPUT AMPS	OUTPUT	UPS LBS.	BATTERY	STD. RUN TIME	BATTERY LBS.
GRS11-3K60-120-120	3	120VAC	43 A	120 VAC, 60 Hz	150	PC3K-84	10 Min.	125
GRS11-3K50-220-220	3	220VAC	26 A	220 VAC, 50Hz	150	PC3K-156	22 Min.	188
GRS11-3K400-115-115	3	115 VAC	43 A	115 VAC, 400 Hz	150	PC3K-84	10 Min.	125
GRS11-3K60-120/208-120	3	120/208 VAC	15 A	120 VAC, 60 Hz	150	PC3K-168	27 Min.	225
GRS11-5K60-120-120	5	120VAC	66 A	120 VAC, 60 Hz	200	PC5K-84-2	10 Min.	225
GRS11-5K50-220-220	5	220VAC	39 A	220 VAC, 50Hz	200	PC5K-156	11 Min.	188
GRS11-5K400-115-115	5	115 VAC	66 A	115 VAC, 400 Hz	200	PC5K-84-2	10 Min.	225
GRS11-5K60-120/208-120	5	120/208 VAC	23 A	120 VAC, 60 Hz	200	PC5K-168	12 Min.	225
GRS11-6K60-120-120	6	120VAC	79 A	120 VAC, 60 Hz	225	PC6K-84-2	8 Min.	225
GRS11-6K50-220-220	6	220VAC	47 A	220 VAC, 50Hz	225	PC6K-156	9 Min.	188
GRS11-6K400-115-115	6	115 VAC	79 A	115 VAC, 400 Hz	225	PC6K-84-2	8 Min.	225
GRS11-6K60-120/208-120	6	120/208 VAC	28 A	120 VAC, 60 Hz	225	PC6K-168	10 Min.	225

NOTES:
1. ALL DIMENSIONS ARE IN INCHES.
2. EXTERIOR COLOR ANSI #61 GRAY.

TYPICAL 5 KVA UPS CHASSIS

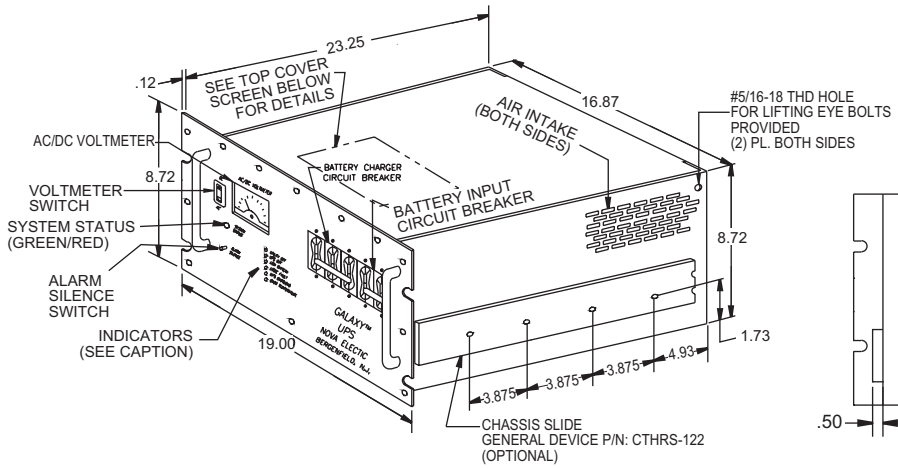

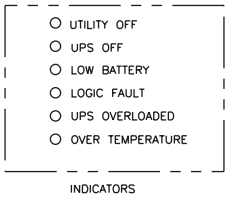

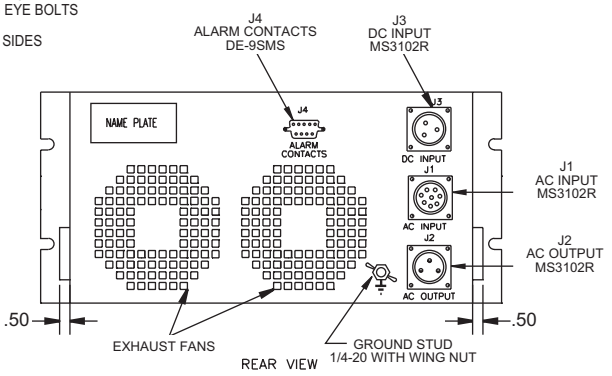

WEB : www.novaelectric.com
E-Mail : *novasales@theallpower.com*
PHONE : (201) 385-0500 **FAX** : (201) 385-0702

NOVA ELECTRIC
A Division of
TECHNOLOGY DYNAMICS, INC.
100 School St., Bergenfield NJ 07621

ISO 9002 A5269